UNIVERSITY OF CAMBRIDGE INTERNATIONAL EXAMINATIONS
International General Certificate of Secondary Education

CANDIDATE NAME	

CENTRE NUMBER						CANDIDATE NUMBER				

* 5 5 2 4 1 0 8 3 5 8 *

CHEMISTRY **0620/21**

Paper 2 **October/November 2011**

1 hour 15 minutes

Candidates answer on the Question Paper.

No Additional Materials are required.

READ THESE INSTRUCTIONS FIRST

Write your Centre number, candidate number and name in the spaces at the top of this page.
Write in dark blue or black pen.
You may need to use a pencil for any diagrams, graphs or rough working.
Do not use staples, paper clips, highlighters, glue or correction fluid.
DO **NOT** WRITE IN ANY BARCODES.

Answer **all** questions.
A copy of the Periodic Table is printed on page 20.

At the end of the examination, fasten all your work securely together.
The number of marks is given in brackets [ ] at the end of each question or part question.

For Examiner's Use	
1	
2	
3	
4	
5	
6	
7	
8	
Total	

This document consists of **18** printed pages and **2** blank pages.

© UCLES 2011

UNIVERSITY of CAMBRIDGE International Examinations

www.root19.com +91 - 9969 353 391

For Examiner's Use

1 Chromatography can be used to test for the purity of substances.

(a) **(i)** Describe **one** area in everyday life where purity of substances is important.

..... [1]

(ii) Mineral water contains dissolved salts such as magnesium chloride.
Which one of the following statements about mineral water is correct?
Tick **one** box.

Mineral water boils at slightly above 100 °C. ☐

Mineral water is pure water. ☐

Mineral water boils at exactly 100 °C. ☐

Another name for mineral water is fizzy water. ☐

[1]

(b) The diagram shows the apparatus used to separate different dyes in food colourings.

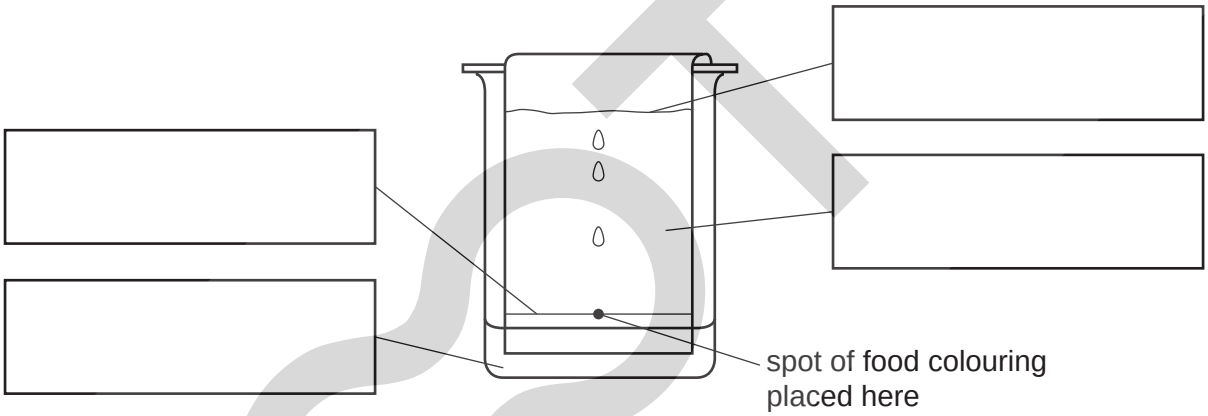

Label the diagram in the boxes provided using the words below.

chromatography paper **origin line** **solvent** **solvent front** [2]

© UCLES 2011
www.root19.com

+91 - 9969 353 391

For Examiner's Use

(c) The diagram below shows the chromatography of four different food colourings, **A**, **B**, **C** and **D**.

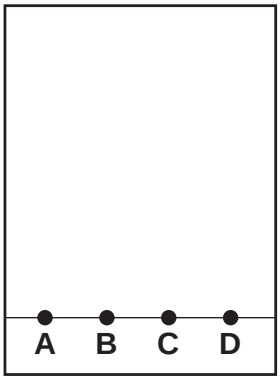

at the start of the experiment

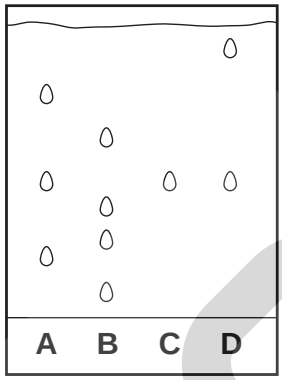

the final chromatogram

(i) Which food colouring, **A**, **B**, **C** or **D**, contains only one dye? ..... [1]

(ii) Which **three** food colourings have one dye in common? ..... [1]

(iii) Which food colouring contains the greatest number of dyes? ..... [1]

[Total: 7]

© UCLES 2011
www.root19.com

+91 - 9969 353 391

For Examiner's Use

2 A student set up an experiment to demonstrate rusting as shown below.
He made observations at the start of the experiment, after 2 weeks and after 4 weeks.

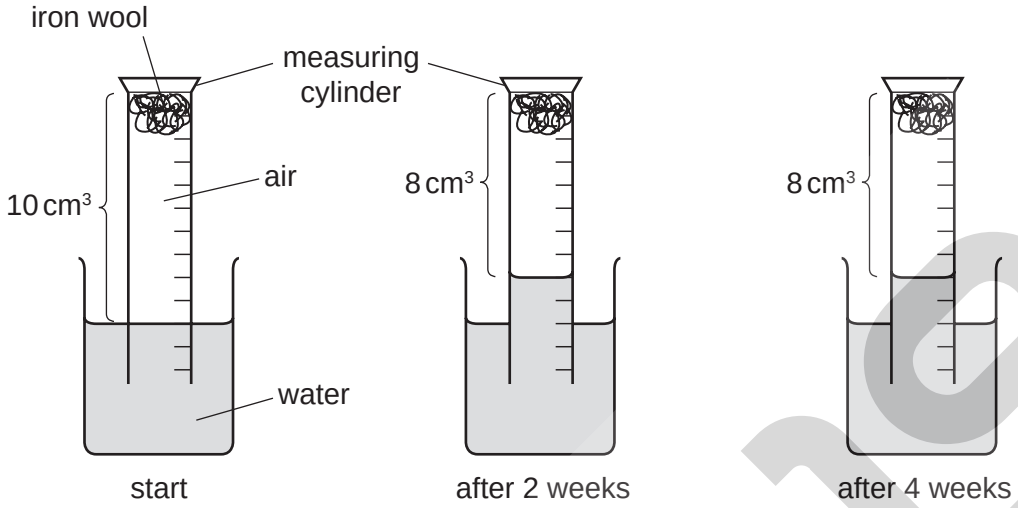

(a) What conditions are needed for the iron wool to rust?

..... [2]

(b) Two weeks after the start of the experiment, the volume of air in the measuring cylinder had decreased. After a further two weeks there was no change in the volume of air.
Explain the results of this experiment.

.....

.....

.....

..... [3]

(c) What change would you observe in the iron wool as it rusted?

appearance at start .....

appearance after 2 weeks ..... [2]

(d) Rust contains iron(III) ions.
Describe a test for iron(III) ions.

test .....

result ..... [2]

© UCLES 2011
www.root19.com

+91 - 9969 353 391

For Examiner's Use

(e) Clean iron reacts with dilute hydrochloric acid.

$$Fe + 2HCl \rightarrow FeCl_2 + H_2$$

Write a word equation for this reaction.

..... [2]

[Total: 11]

© UCLES 2011
www.root19.com

+91 - 9969 353391

For Examiner's Use

3 The diagram shows some of the elements in Period 3 of the Periodic Table.

Na	Mg		Si	P	S	C*l*	Ar

(a) From the diagram, choose

(i) **one** element which forms a basic oxide.

..... [1]

(ii) **two** elements which form acidic oxides.

..... and ..... [2]

(b) Describe how metallic character of the elements changes across a period.

..... [1]

(c) What determines the order of the elements in the Periodic Table?

..... [1]

(d) The missing element in the table is aluminium.

(i) Describe the structure of an aluminium atom.
In your description write about

- the number and types of particles in the nucleus
- the electrons.

.....

.....

.....

.....

.....

..... [4]

© UCLES 2011
www.root19.com

+91 - 9969 353 391

For Examiner's Use

(ii) Use the information in the table below to explain why aluminium is used in preference to iron or titanium for overhead electricity cables.
Give **two** reasons.

metal	electrical conductivity	density in g / cm^3	melting point / °C	strength	price in £ / kg
aluminium	very good	2.7	660	fairly strong	24
iron	good	7.9	1535	strong	3
titanium	good	4.5	1660	very strong	104

.....

.....

..... [2]

(e) Chlorine is a green gas.
When chlorine is bubbled through an aqueous solution of potassium bromide, the solution turns orange.
Complete the symbol equation for this reaction.

$$Cl_2 + \text{.....}KBr \rightarrow \text{.....} + \text{.....}KCl$$ [2]

(f) Argon is a noble gas which is denser than air.
Which one of these statements about argon is correct?
Tick **one** box.

Argon reacts rapidly with chlorine. ☐

Argon is used for filling balloons. ☐

Argon has a complete outer shell of valency electrons. ☐

Argon has only two valency electrons in its outer shell. ☐

[1]

[Total: 14]

© UCLES 2011
www.root19.com

+91 - 9969 353391

For Examiner's Use

4 Ethane is a saturated hydrocarbon. Ethene is an unsaturated hydrocarbon.

(a) Describe how you can distinguish between ethane and ethene using aqueous bromine.

.....

..... [2]

(b) The diagram shows the apparatus used to crack long chain alkanes into alkenes and shorter chained alkanes in the laboratory.

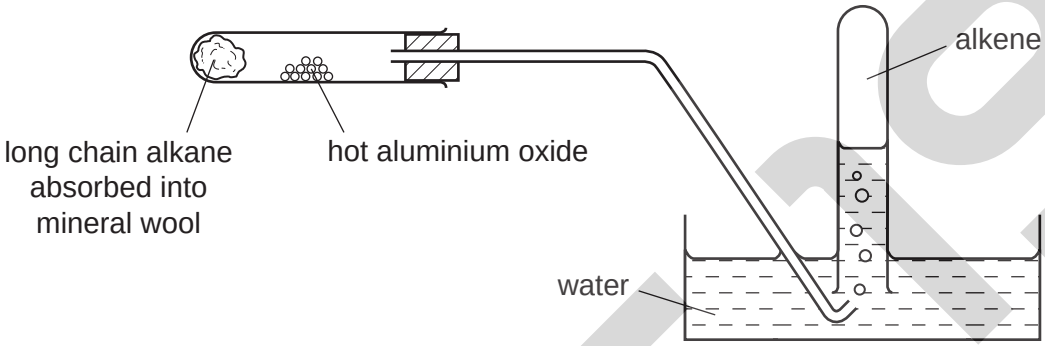

(i) State **two** conditions needed for cracking.

..... [2]

(ii) What information in the diagram shows that alkenes are insoluble in water?

..... [1]

(iii) Propene is an alkene.
The formula of propene is C_3H_6.
Calculate the relative molecular mass of propene.

[1]

(iv) Complete the equation for the cracking of the alkane tetradecane, $C_{14}H_{30}$.

$$C_{14}H_{30} \rightarrow \text{.....} + C_{10}H_{22}$$ [1]

© UCLES 2011
www.root19.com

+91 - 9969 353 391

For Examiner's Use

(c) Poly(ethene) is formed from ethene monomers.
Select two words from the list that describe this reaction.

addition	**condensation**	**dehydration**
fermentation	**neutralisation**	**polymerisation**

..... and ..... [2]

[Total: 9]

ROOT 19

For Examiner's Use

5 A pupil studied the effect of temperature on the speed of reaction of aqueous sodium thiosulfate with dilute hydrochloric acid.

When he added hydrochloric acid to a solution of sodium thiosulfate, a precipitate of sulfur gradually formed. He recorded the time taken for some writing placed under the flask to disappear from view.

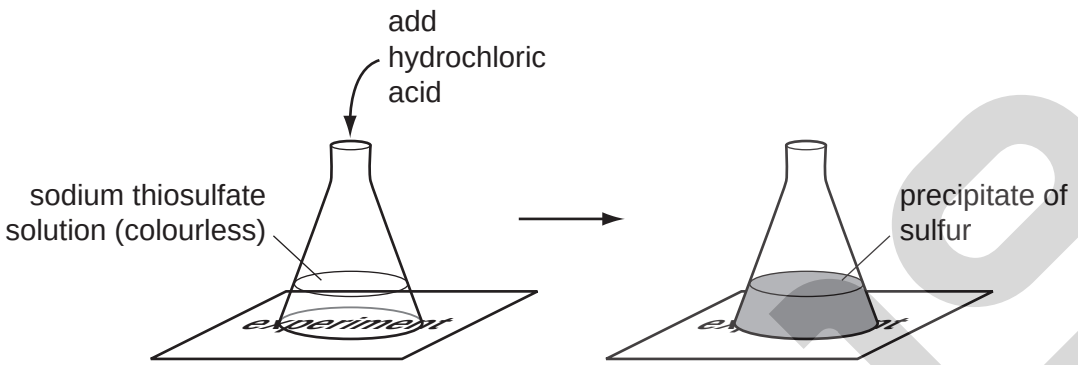

He repeated the experiment at different temperatures.
The table shows his results.

temperature / °C	time taken for the writing to disappear from view / s
15	100
30	56
45	34
60	20
75	12

© UCLES 2011
www.root19.com

+91 - 9969 353 391

For Examiner's Use

(a) **(i)** On the grid below, plot a graph of the time taken against temperature.

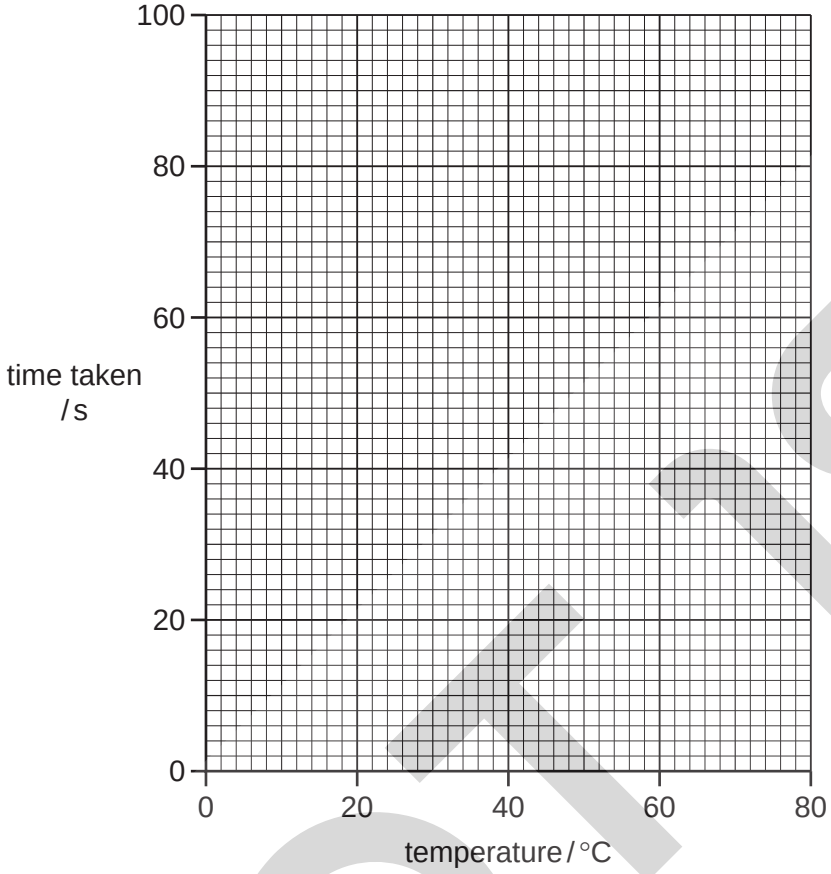

[3]

(ii) At which temperature was the reaction the fastest?

..... [1]

(iii) Describe how the temperature affects the speed of reaction.

.....

..... [1]

(b) Suggest how the speed of this reaction at 30 °C will change when the concentration of hydrochloric acid is increased.

..... [1]

© UCLES 2011
www.root19.com

+91 - 9969 353 391

For Examiner's Use

(c) The equation for the reaction is

$$Na_2S_2O_3(aq) + 2HCl(aq) \rightarrow 2NaCl(aq) + SO_2(g) + S(s) + H_2O(l)$$

(i) State the name of the salt formed in this reaction.

..... [1]

(ii) To which group in the Periodic Table does sulfur belong?

..... [1]

(iii) Sulfur dioxide is formed when coal is burnt in power stations.
State **one** harmful effect of sulfur dioxide on the environment.

..... [1]

(iv) Sulfur dioxide can be removed in power stations by flue gas desulfurisation.
Which one of these compounds is used to remove the sulfur dioxide in this process?
Tick **one** box.

calcium chloride ☐

calcium oxide ☐

nitrogen dioxide ☐

potassium nitrate ☐

[1]

(v) Magnesium burns in sulfur dioxide.

$$2Mg + SO_2 \rightarrow 2MgO + S$$

Refer to this equation to explain why this is a redox reaction.

.....

..... [2]

[Total: 12]

© UCLES 2011
www.root19.com

+91 - 9969 353 391

For Examiner's Use

6 The diagram shows the flame from a Bunsen burner when its air hole is open.

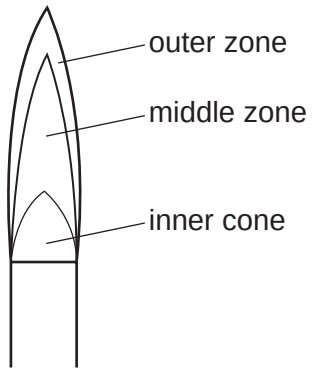

(a) In the outer zone of the flame, methane undergoes complete combustion.
Complete the equation for the complete combustion of methane.

$$CH_4 + \text{.....} \rightarrow CO_2 + 2H_2O$$ [2]

(b) In the middle zone of the flame, less air is present and incomplete combustion occurs.
State the name of the poisonous gas formed during the incomplete combustion of methane.

..... [1]

(c) The inner cone of the flame contains only unburnt methane.
A student put a match in the Bunsen burner as shown in the diagram below.
He then lit the Bunsen burner.

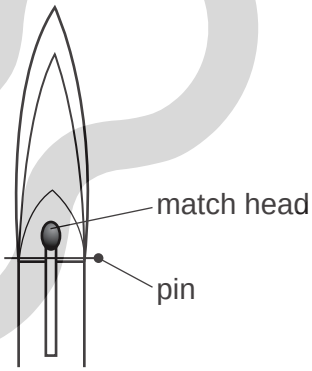

Suggest why the match did not catch fire.

..... [1]

© UCLES 2011
www.root19.com

+91 - 9969 353 391

For Examiner's Use

(d) The products of the complete combustion of methane were drawn through the apparatus shown below.

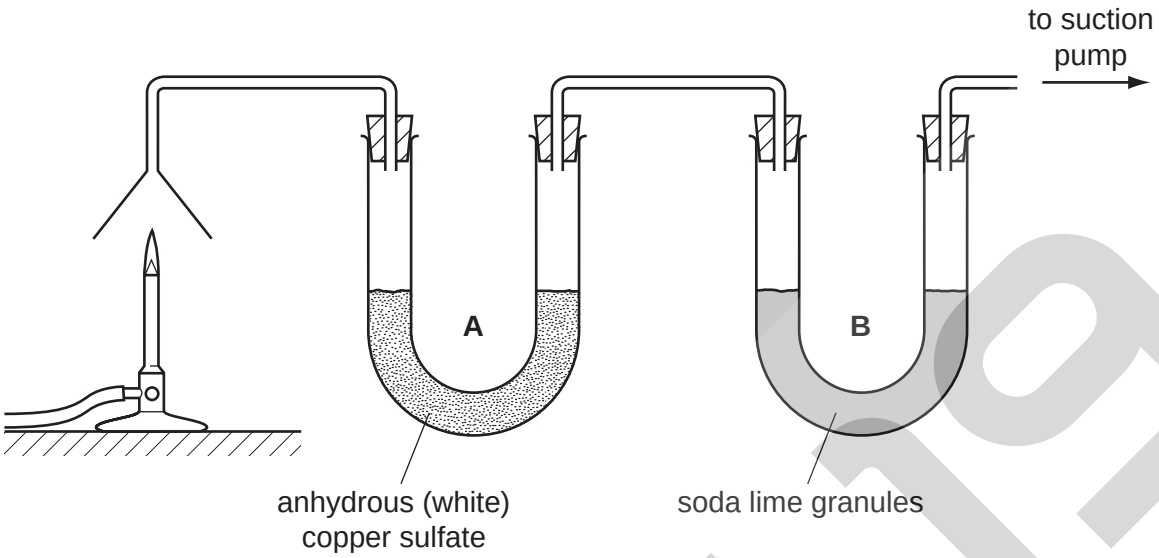

(i) State the name of the substance that turned the white copper sulfate in tube **A**, blue.

..... [1]

(ii) How could you change blue copper sulfate to white copper sulfate?

..... [1]

(iii) The soda lime in tube **B** absorbs carbon dioxide.
State and explain what happens to the mass of the soda lime as the experiment proceeds.

.....

..... [1]

(e) Methane is a greenhouse gas.

(i) State **one** source of the methane in the atmosphere.

..... [1]

(ii) State **one** effect of an increased concentration of methane in the atmosphere.

..... [1]

[Total: 9]

© UCLES 2011
www.root19.com

+91 - 9969 353 391

For Examiner's Use

7 A student studied the reaction of citric acid with sodium hydrogen carbonate. She put a solution of citric acid in a plastic cup and measured its temperature.
She then added sodium hydrogen carbonate powder and measured the temperature again.

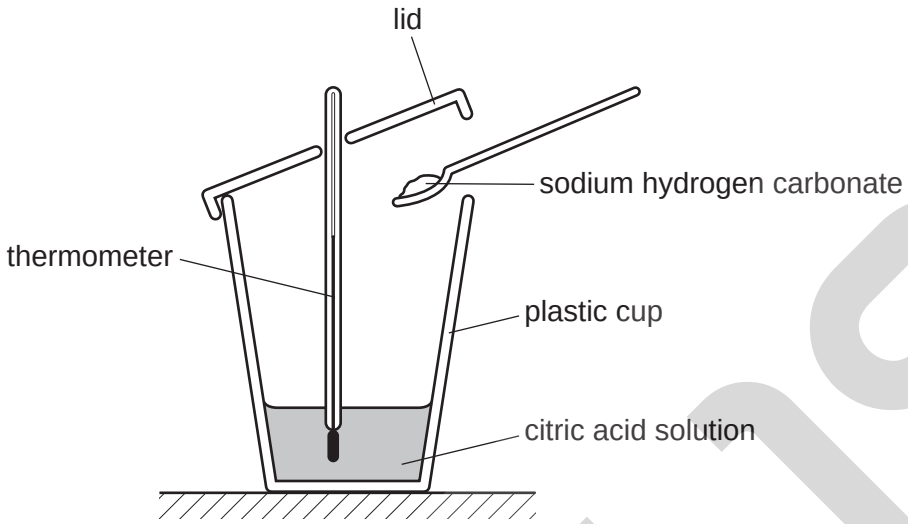

(a) The temperature of the reaction mixture decreased.
Which one of these statements about this reaction is correct?
Tick **one** box.

The reaction released heat energy. ☐

The reaction is exothermic. ☐

The reaction is endothermic. ☐

The products have less energy than the reactants. ☐

[1]

(b) The structure of citric acid is shown below.

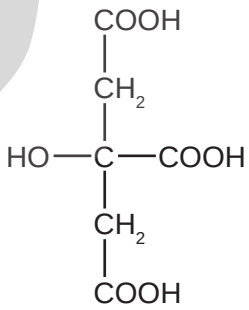

(i) On this structure, put a ring around the alcohol functional group. [1]

(ii) Write the simplest formula for citric acid.

..... [1]

www.root19.com
+91 - 9969 353 391

For Examiner's Use

(c) Salts of citric acid can be prepared from lemon juice.

(i) The lemon juice is first boiled to remove various substances including enzymes. What do you understand by the term *enzyme*?

.....

..... [2]

(ii) The lemon juice is then neutralised with calcium carbonate and solid calcium citrate is formed.
Suggest how the calcium citrate can be separated from the mixture.

..... [1]

(iii) Carbon dioxide gas is released when citric acid solution reacts with calcium carbonate.

Describe a test for carbon dioxide.

test .....

result ..... [2]

(d) The concentration of a citric acid solution can be found by carrying out a titration using the apparatus shown below.

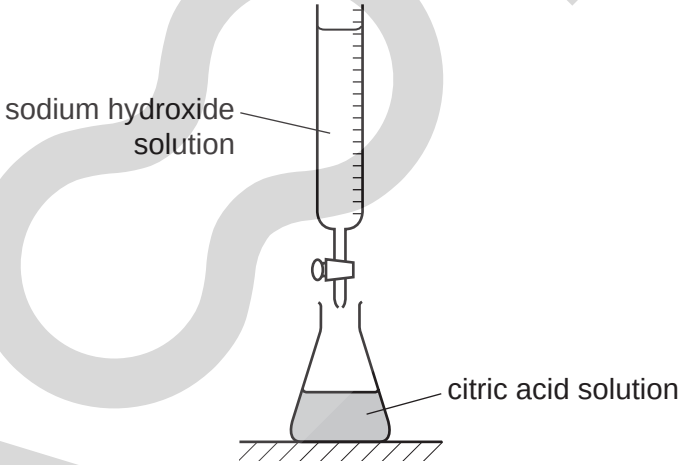

Describe how to carry out this titration.

.....

.....

.....

.....

..... [3]

[Total: 11]

© UCLES 2011
www.root19.com

+91 - 9969 353 391

For Examiner's Use

8 The diagram shows an electrolysis cell for extracting sodium from molten sodium chloride.

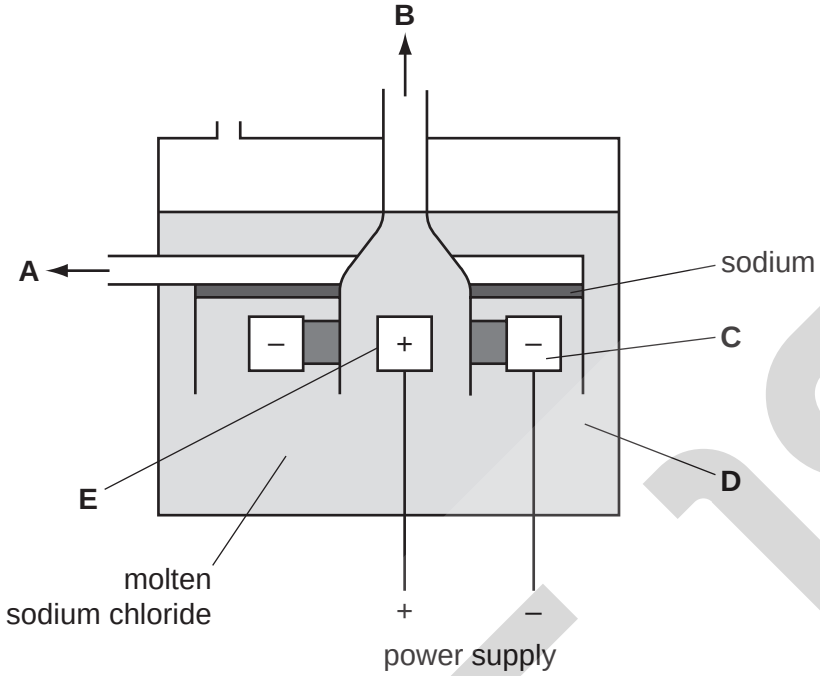

(a) **(i)** Which letter on the diagram represents

the electrolyte? .....

the cathode? ..... [2]

(ii) Which one of the following substances is most likely to be used as the anode? Put a ring around the correct answer.

graphite **sodium** **sulfur** **zinc** [1]

(b) What information from the diagram suggests that sodium is less dense than molten sodium chloride?

..... [1]

(c) Predict the product formed at the anode during this electrolysis.

..... [1]

(d) Name the gases formed at the anode and cathode when an **aqueous** solution of sodium chloride is electrolysed.

product at the anode .....

product at the cathode ..... [2]

[Total: 7]

© UCLES 2011
www.root19.com

+91 - 9969 353 391

BLANK PAGE

© UCLES 2011
www.root19.com

+91 - 9969 353 391

BLANK PAGE

© UCLES 2011
www.root19.com

+91 - 9969 353 391

DATA SHEET
The Periodic Table of the Elements

Group I	Group II											Group III	Group IV	Group V	Group VI	Group VII	Group 0
							1 **H** Hydrogen 1										4 **He** Helium 2
7 **Li** Lithium 3	9 **Be** Beryllium 4											11 **B** Boron 5	12 **C** Carbon 6	14 **N** Nitrogen 7	16 **O** Oxygen 8	19 **F** Fluorine 9	20 **Ne** Neon 10
23 **Na** Sodium 11	24 **Mg** Magnesium 12											27 **Al** Aluminium 13	28 **Si** Silicon 14	31 **P** Phosphorus 15	32 **S** Sulfur 16	35.5 **Cl** Chlorine 17	40 **Ar** Argon 18
39 **K** Potassium 19	40 **Ca** Calcium 20	45 **Sc** Scandium 21	48 **Ti** Titanium 22	51 **V** Vanadium 23	52 **Cr** Chromium 24	55 **Mn** Manganese 25	56 **Fe** Iron 26	59 **Co** Cobalt 27	59 **Ni** Nickel 28	64 **Cu** Copper 29	65 **Zn** Zinc 30	70 **Ga** Gallium 31	73 **Ge** Germanium 32	75 **As** Arsenic 33	79 **Se** Selenium 34	80 **Br** Bromine 35	84 **Kr** Krypton 36
85 **Rb** Rubidium 37	88 **Sr** Strontium 38	89 **Y** Yttrium 39	91 **Zr** Zirconium 40	93 **Nb** Niobium 41	96 **Mo** Molybdenum 42	**Tc** Technetium 43	101 **Ru** Ruthenium 44	103 **Rh** Rhodium 45	106 **Pd** Palladium 46	108 **Ag** Silver 47	112 **Cd** Cadmium 48	115 **In** Indium 49	119 **Sn** Tin 50	122 **Sb** Antimony 51	128 **Te** Tellurium 52	127 **I** Iodine 53	131 **Xe** Xenon 54
133 **Cs** Caesium 55	137 **Ba** Barium 56	139 **La** Lanthanum 57 *	178 **Hf** Hafnium 72	181 **Ta** Tantalum 73	184 **W** Tungsten 74	186 **Re** Rhenium 75	190 **Os** Osmium 76	192 **Ir** Iridium 77	195 **Pt** Platinum 78	197 **Au** Gold 79	201 **Hg** Mercury 80	204 **Tl** Thallium 81	207 **Pb** Lead 82	209 **Bi** Bismuth 83	**Po** Polonium 84	**At** Astatine 85	**Rn** Radon 86
Fr Francium 87	226 **Ra** Radium 88	227 **Ac** Actinium 89 †															

140 **Ce** Cerium 58	141 **Pr** Praseodymium 59	144 **Nd** Neodymium 60	**Pm** Promethium 61	150 **Sm** Samarium 62	152 **Eu** Europium 63	157 **Gd** Gadolinium 64	159 **Tb** Terbium 65	162 **Dy** Dysprosium 66	165 **Ho** Holmium 67	167 **Er** Erbium 68	169 **Tm** Thulium 69	173 **Yb** Ytterbium 70	175 **Lu** Lutetium 71
232 **Th** Thorium 90	**Pa** Protactinium 91	238 **U** Uranium 92	**Np** Neptunium 93	**Pu** Plutonium 94	**Am** Americium 95	**Cm** Curium 96	**Bk** Berkelium 97	**Cf** Californium 98	**Es** Einsteinium 99	**Fm** Fermium 100	**Md** Mendelevium 101	**No** Nobelium 102	**Lr** Lawrencium 103

*58-71 Lanthanoid series
†90-103 Actinoid series

Key

a	
X	a = relative atomic mass
b	**X** = atomic symbol
	b = proton (atomic) number

The volume of one mole of any gas is 24 dm^3 at room temperature and pressure (r.t.p.).

Permission to reproduce items where third-party owned material protected by copyright is included has been sought and cleared where possible. Every reasonable effort has been made by the publisher (UCLES) to trace copyright holders, but if any items requiring clearance have unwittingly been included the publisher will be pleased to make amends at the earliest possible opportunity.

University of Cambridge International Examinations is part of the Cambridge Assessment Group. Cambridge Assessment is the brand name of University of Cambridge Local Examinations Syndicate (UCLES), which is itself a department of the University of Cambridge.

www.rootot19.com
+91 - 9969 353 391